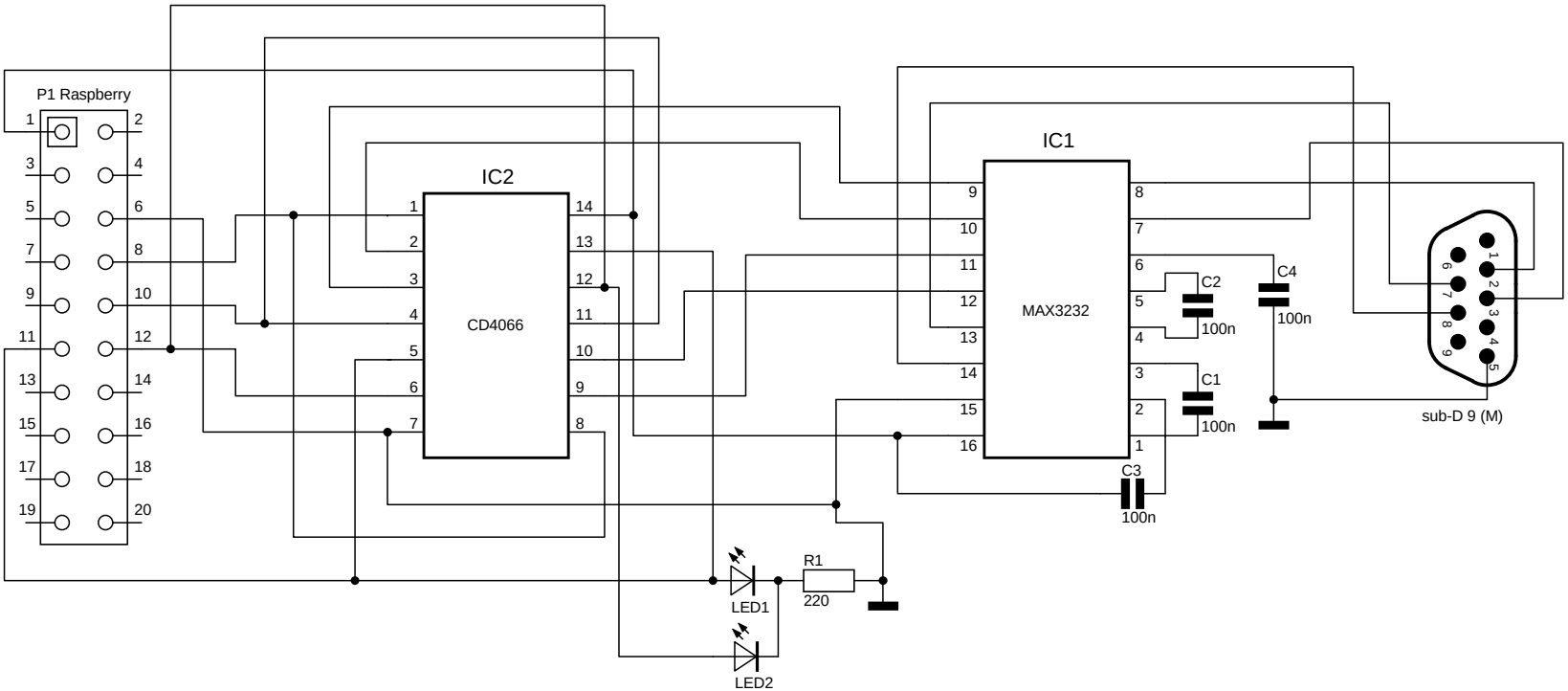
P1 Raspberry
IC2
CD4066
IC1
MAX3232
C1
C2
C3
C4
100n
R1
220
LED1
LED2
sub-D 9 (M)

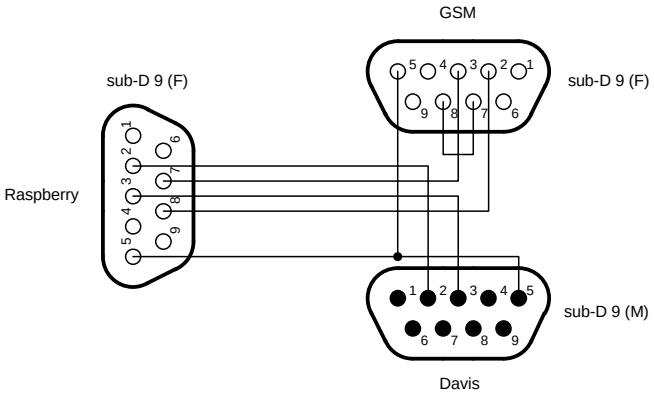
GSM
sub-D 9 (F)
sub-D 9 (F)
Raspberry
sub-D 9 (M)
Davis